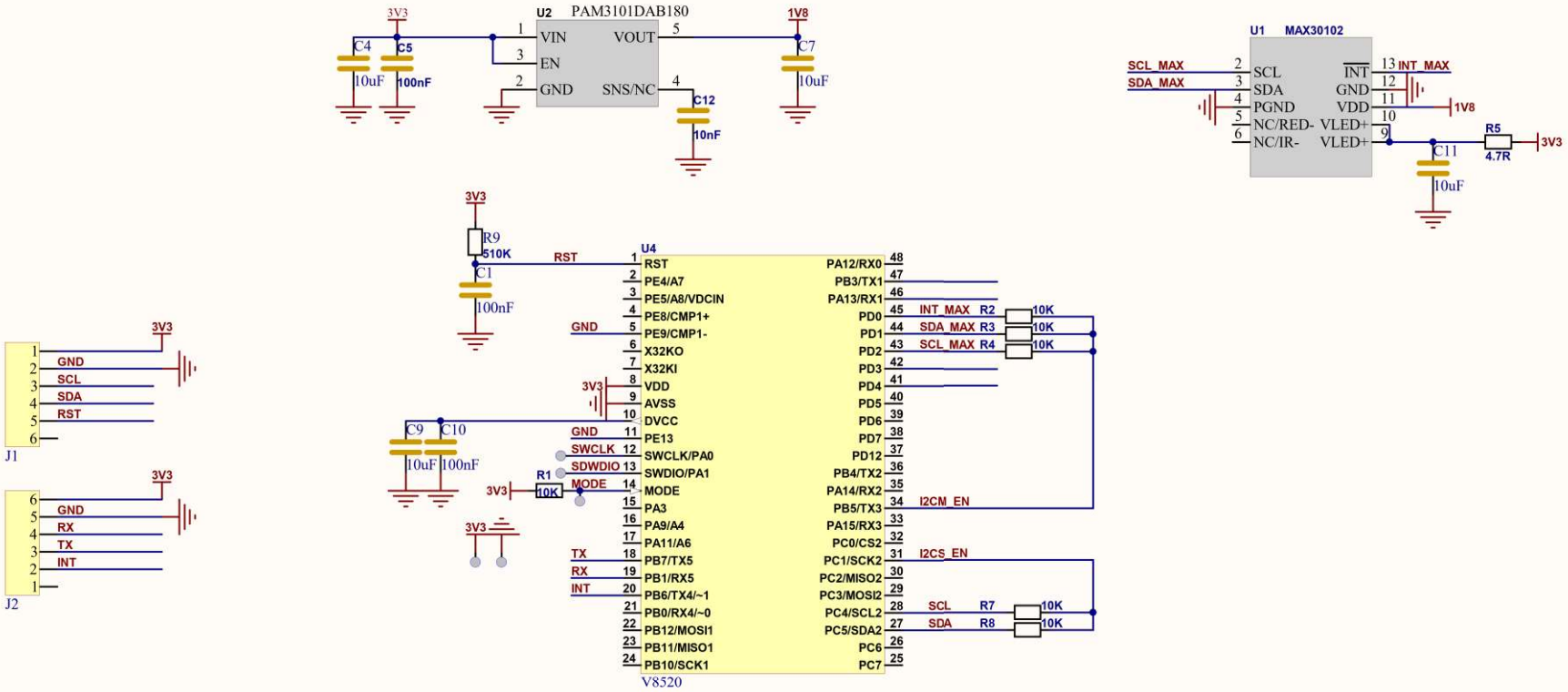

Title: Heart Rate and Oximeter Sensor		Code: SEN0344	
Drawn: lfwag-CD	Revision: V2.0	Size: A4	
Page: 1 of 1	Date: 2021/9/10	Time: 10:15:49	